FM060-45C-EM

FlexPro® Series
Product Status: Reserved

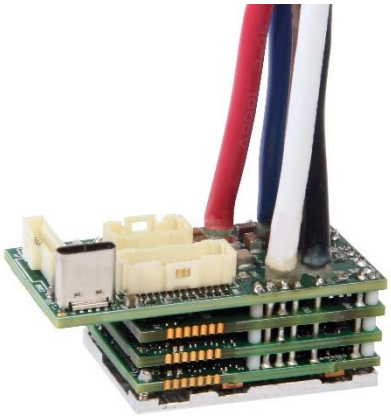

SPECIFICATIONS

Current Continuous	**45 A**
DC Supply Voltage	**10 – 55 VDC**
Network Communication	**EtherCAT**

The **FM060-45C-EM** is a single-axis servo drive and integration board assembly for a FE060-45C-EM FlexPro® series servo drive with IMPACT™ architecture. Connections to the controller, motor, power, and feedback are simplified through the standard connectors featured on the board.

The **FM060-45C-EM** offers full tuning control of all servo loops and is designed to drive brushed and brushless servo motors, and closed loop stepper motors. The drive accepts a variety of external command signals, or can use the built-in Motion Engine, an internal motion controller used with Sequencing and Indexing commands. Programmable digital and analog I/O are included to enhance interfacing with external controllers and devices.

The **FM060-45C-EM** utilizes EtherCAT® network communication using CANopen over EtherCAT (CoE) and is configured via USB. All drive and motor parameters are stored in non-volatile memory.

IMPACT™ (**I**ntegrated **M**otion **P**latform **A**nd **C**ontrol **T**echnology) combines exceptional processing capability and high-current components to create powerful, compact, feature-loaded servo solutions. IMPACT™ is used in all FlexPro® drives and is available in custom products as well.

FEATURES

- CoE – Based on DSP-402 Device Profile for Drives and Motion Control
- Synchronization using Distributed Clocks
- Position Cycle Times down to 100µs
- Four Quadrant Regenerative Operation
- Programmable Gain Settings
- PIDF Velocity Loop
- On-the-Fly Mode Switching
- On-the-Fly Gain Set Switching
- Compact Size, High Power Density
- Dedicated Safe Torque Off (STO) Inputs
- Bridge Status, Fault and Network Status LEDs
- Standard Connections for Easy Setup

Feedback Supported	• Absolute Encoder
	  ○ BiSS C-Mode
	  ○ EnDat 2.2
	• Incremental Encoder
	• Hall Sensors
	• Tachometer (±10V)
		Motors Supported	• Three Phase
			• Single Phase
			• Stepper
				Modes of Operation	• Profile Modes
					• Cyclic Synchronous Modes
					• Current
					• Velocity
					• Position

Command Sources	• Over the Network • ±10V Analog • Sequencing • Indexing • Jogging • Step & Direction • Encoder Following	**Inputs / Outputs**	• 4 Programmable Digital Inputs • 3 Programmable Digital Outputs • 1 Programmable Analog Input	**Agency Approvals**	• RoHS • UL (Pending) • CE (Pending) • TUV Rheinland (STO) (Pending)

ADVANCED Motion Controls · 3805 Calle Tecate, Camarillo, CA, 93012
ph# 805-389-1935 · fx# 805-389-1165 · www.a-m-c.com

BLOCK DIAGRAM

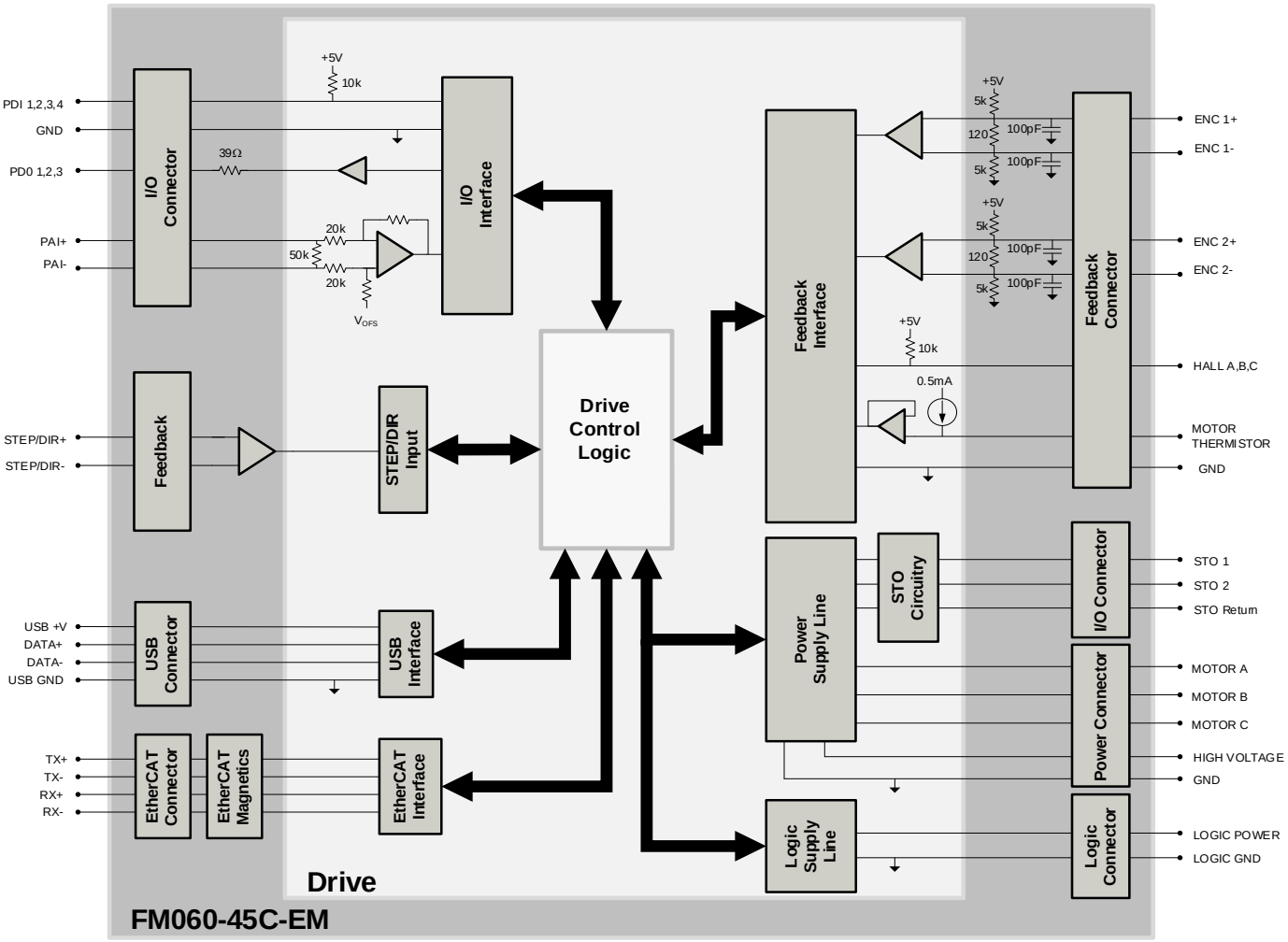

INFORMATION ON APPROVALS AND COMPLIANCES

RoHS Compliant

The RoHS Directive restricts the use of certain substances including lead, mercury, cadmium, hexavalent chromium and halogenated flame retardants PBB and PBDE in electronic equipment.

SPECIFICATIONS

Electrical Specifications		
Description	Units	Value
Nominal DC Supply Input Range	VDC	12 – 48
DC Supply Input Range	VDC	10 – 55
DC Supply Undervoltage	VDC	8
DC Supply Overvoltage	VDC	58
Logic Supply Input Range (required)	VDC	10 – 55
Safe Torque Off Voltage (Default)	VDC	5
Maximum Continuous Current Output[1]	A (Arms)	45 (45)
Bus Capacitance[2]	µF	52.8
Efficiency at Rated Power	%	99
Maximum Continuous Output Power	W	2351
Maximum Power Dissipation at Rated Power	W	124
Minimum Load Inductance (line-to-line)[3]	µH	150 (@ 48VDC supply); 75 (@24VDC supply); 40 (@12VDC supply)
Switching Frequency	kHz	20
Maximum Output PWM Duty Cycle	%	83

Control Specifications		
Description	Units	Value
Communication Interfaces[4]	-	EtherCAT® (USB for configuration)
Command Sources	-	±10 V Analog, Over the Network, Sequencing, Indexing, Jogging, Step & Direction, Encoder Following
Feedback Supported	-	Absolute Encoder (BiSS C-Mode, EnDat 2.2), Incremental Encoder, Hall Sensors, Auxiliary Incremental Encoder, Tachometer (±10V)
Commutation Methods	-	Sinusoidal, Trapezoidal
Modes of Operation	-	Profile Modes, Cyclic Synchronous Modes, Current, Velocity, Position
Motors Supported[5]	-	Three Phase (Brushless Servo), Single Phase (Brushed Servo, Voice Coil, Inductive Load), Stepper (2- or 3-Phase Closed Loop)
Hardware Protection	-	40+ Configurable Functions, Over Current, Over Temperature (Drive & Motor), Over Voltage, Short Circuit (Phase-Phase & Phase-Ground), Under Voltage
Programmable Digital Inputs/Outputs	-	4/3
Programmable Analog Inputs/Outputs	-	1/0
Primary I/O Logic Level	-	5 VDC, not isolated
Current Loop Sample Time	µs	50
Velocity Loop Sample Time	µs	100
Position Loop Sample Time	µs	100
Maximum Encoder Frequency	MHz	20 (5 pre-quadrature)

Mechanical Specifications		
Description	Units	Value
Size (H x W x D)	mm (in)	50.8 x 25.4 x 26.0 (2.00 x 1.00 x 1.03)
Weight	g (oz)	48.2 (1.7)
Ambient Operating Temperature Range[6]	°C (°F)	0 – 65 (32 – 149)
Storage Temperature Range	°C (°F)	-40 – 85 (-40 – 185)
Relative Humidity	-	0-95%, non-condensing
P1 ETHERCAT COMMUNICATION CONNECTOR	-	12-pin, 1.0mm spaced single row vertical header
P2 USB CONNECTOR	-	USB Type C, vertical entry
P3 IO and LOGIC CONNECTOR	-	20-pin, 1.0mm spaced dual row vertical header
P4 FEEDBACK CONNECTOR	-	30-pin, 1.0mm spaced dual row vertical header
P5 POWER CONNECTOR	-	2x 165 mm, 16 AWG flying leads w/ solder-dipped ends
P6 MOTOR POWER CONNECTOR	-	3x 165 mm, 16 AWG flying leads w/ solder-dipped ends

Notes

1. Continuous A_{rms} value attainable when RMS Charge-Based Limiting is used.
2. Applications with a supply voltage higher than 30VDC require a minimum external decoupling capacitance of 470µF / 100V added across HV and POWER GND.
3. Lower inductance is acceptable for bus voltages well below maximum. Use external inductance to meet requirements.
4. EtherCAT® is a registered trademark and patented technology, licensed by Beckhoff Automation GmbH, Germany.
5. Maximum motor speed for stepper motors is 600 RPM. Consult the hardware installation manual for 2-phase stepper wiring configuration.
6. Additional cooling and/or heatsink may be required to achieve rated performance.

ADVANCED Motion Controls ·3805 Calle Tecate, Camarillo, CA, 93012
ph# 805-389-1935 ·fx# 805-389-1165·www.a-m-c.com

PIN FUNCTIONS

P1 – EtherCAT Communication Connector

Pin	Name	Description / Notes	I/O
1	RX+ IN	Receiver + (100Base-TX)	I
2	RX- IN	Receiver - (100Base-TX)	I
3	TX+ IN	Transmitter + (100Base-TX)	I
4	TX- IN	Transmitter - (100Base-TX)	I
5	GND	Ground	GND
6	RX+ OUT	Receiver + (100Base-TX)	O
7	RX- OUT	Receiver - (100Base-TX)	O
8	TX+ OUT	Transmitter + (100Base-TX)	O
9	TX- OUT	Transmitter - (100Base-TX)	O
10	GND	Ground	GND
11	ECAT_ERROR LED	Error Indicator for EtherCAT Network for optional external user LED connection.	O
12	ECAT_STATUS LED	Run State Indicator for EtherCAT Network for optional external user LED connection.	O

Connector Information	12-pin, 1.0mm, spaced single row vertical header
Mating Connector Details	Molex: 5013301200
Mating Connector Included	No

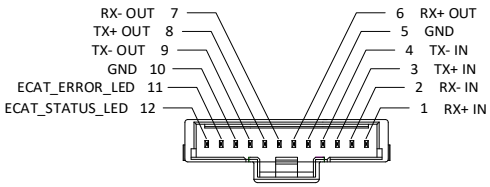

P2 – USB Connector

Pin	Name	Description / Notes	I/O

Connector Information	USB Type C port
Mating Connector Details	Standard Type C USB connection cable
Mating Connector Included	No

P3 – I/O and Logic Connector

Pin	Name	Description / Notes	I/O
1	PDI-1	General Purpose Programmable Digital Input	I
2	PDI-2	General Purpose Programmable Digital Input	I
3	PDI-3	General Purpose Programmable Digital Input	I
4	PDI-4	General Purpose Programmable Digital Input	I
5	PDO-1	General Purpose Programmable Digital Output (TTL/8mA)	O
6	PDO-2	General Purpose Programmable Digital Output (TTL/8mA)	O
7	PDO-3	General Purpose Programmable Digital Output (TTL/8mA)	O
8	GND	Ground	GND
9	+5V OUT	+5V Supply Output. Short-circuit protected. (300ma total load capacity shared between P3-9, P4-1, P4-13, and P4-21)	O
10	GND	Ground	GND
11	PAI-1+	General Purpose Differential Programmable Analog Input or Reference Signal Input.	I
12	PAI-1-	±10VDC Range (12-bit Resolution)	I
13	STO-1 INPUT	Safe Torque Off – Input 1	I
14	STO RETURN	Safe Torque Off Return	STORET
15	STO-2 INPUT	Safe Torque Off – Input 2	I
16	STO RETURN	Safe Torque Off Return	STORET
17	RESERVED / NC	Reserved	-
18	GND	Ground	GND
19	LOGIC PWR	Logic Supply Input (10 – 55VDC) (required)	I
20	LOGIC GND	Ground	GND

Connector Information	20-pin, 1.0mm spaced dual row vertical header
Mating Connector Details	Molex: 5011892010
Mating Connector Included	No

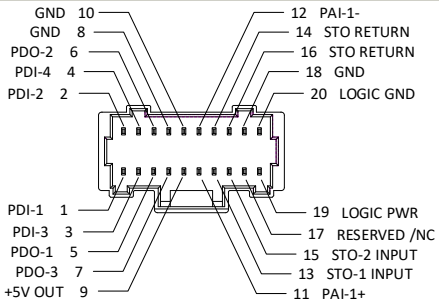

P4 – Feedback Connector				
Pin	Absolute Encoder	Incremental Encoder	Description / Notes	I/O
1	+5V OUT	+5V OUT	+5V Supply Output. Short-circuit protected. (300ma total load capacity shared between P3-9, P4-1, P4-13, and P4-21)	O
2	GND	GND	Ground	GND
3	HALL A	HALL A	Single-ended Commutation Sensor Inputs	I
4	HALL B	HALL B		I
5	HALL C	HALL C		I
6	THERMISTOR	THERMISTOR	Motor Thermal Protection	I
7	ENC 2 A+	ENC 2 A+	Differential Incremental Encoder A	I
8	ENC 2 A-	ENC 2 A-		I
9	ENC 2 B+	ENC 2 B+	Differential Incremental Encoder B	I
10	ENC 2 B-	ENC 2 B-		I
11	ENC 2 I+	ENC 2 I+	Differential Incremental Encoder Index	I
12	ENC 2 I-	ENC 2 I-		I
13	+5V OUT	+5V OUT	+5V Supply Output. Short-circuit protected. (300ma total load capacity shared between P3-9, P4-1, P4-13, and P4-21)	O
14	GND	GND	Ground	GND
15	STEP +	STEP +	Differential Step Input	I
16	STEP -	STEP -		I
17	DIR +	DIR +	Differential Direction Input	I
18	DIR -	DIR -		I
19	RESERVED	RESERVED	Reserved	-
20	RESERVED	RESERVED		-
21	+5V OUT	+5V OUT	+5V Supply Output. Short-circuit protected. (300ma total load capacity shared between P3-9, P4-1, P4-13, and P4-21)	O
22	GND	GND	Ground	GND
23	ENC 1 DATA+	ENC 1 A+	Differential Data Line for Absolute Encoders (BiSS: SLO+/-) or Differential Incremental Encoder A	I
24	ENC 1 DATA-	ENC 1 A-		I
25	ENC 1 CLOCK+	ENC 1 B+	Differential Clock Line for Absolute Encoders (BiSS: MA+/-) or Differential Incremental Encoder B	I
26	ENC 1 CLOCK-	ENC 1 B-		I
27	ENC 1 REF MARK+	ENC 1 I+	Differential Reference Mark for Absolute Encoders (Leave open for BiSS and EnDat 2.2) or Differential Incremental Encoder Index	I
28	ENC 1 REF MARK-	ENC 1 I-		I
29	RESERVED	RESERVED	Reserved	-
30	RESERVED	RESERVED	Reserved	-

Connector Information	30-pin, 1.0mm spaced dual row vertical header
Mating Connector Details	Molex: 5011893010
Mating Connector Included	No

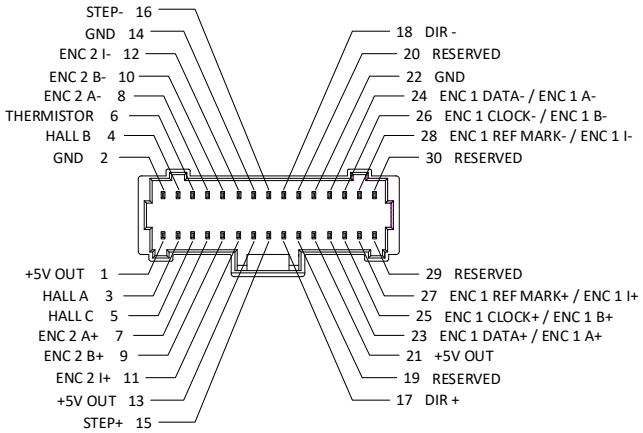

P5 - Power Connector			
Pin	Name	Description / Notes	I/O
1	HV	DC Supply Input (red). Applications with a supply voltage higher than 30VDC require a minimum external decoupling capacitance of 470µF / 100V added across HV and POWER GND.	I
2	POWER GND	Ground (black)	GND

Connector Information	2x 165 mm, 16 AWG flying leads w/ solder-dipped ends
Mating Connector Details	N/A
Mating Connector Included	N/A

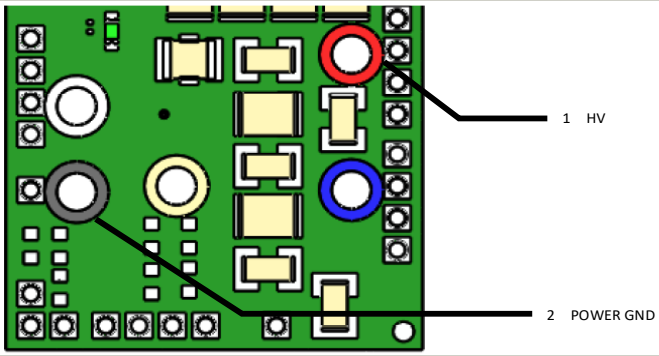

P6 – Motor Power Connector			
Pin	Name	Description / Notes	I/O
1	MOTOR A	Motor Phase A (white)	O
2	MOTOR B	Motor Phase B (brown)	O
3	MOTOR C	Motor Phase C (blue)	O

Connector Information	3x 165 mm, 16 AWG flying leads w/ solder-dipped ends
Mating Connector Details	N/A
Mating Connector Included	N/A

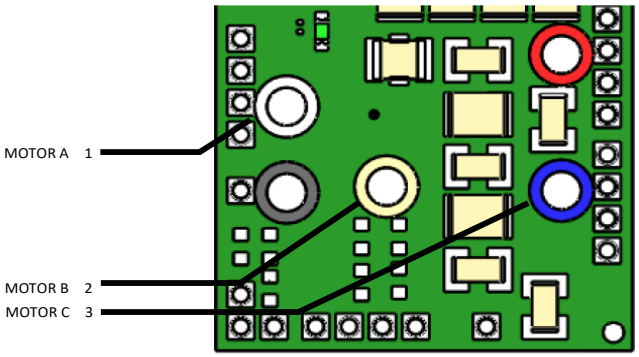

ADVANCED Motion Controls ·3805 Calle Tecate, Camarillo, CA, 93012
ph# 805-389-1935 ·fx# 805-389-1165·www.a-m-c.com

BOARD CONFIGURATION

Status LED Functions

LED	Description
STAT	Indicates drive power bridge status. GREEN when DC bus power is applied and the drive is enabled. RED when the drive is in a fault state.
LOGIC PWR	Indicates that +5V logic power is available to the drive. GREEN when +5V logic power is available.

Communication Status LED Functions

LED	Description	
LINK/ACT IN/OUT	Green – On	Valid Link - No Activity
	Green – Flickering	Valid Link - Network Activity
	Off	Invalid Link
ETHERCAT STATUS	Green – On	The device is in the state OPERATIONAL
	Green – Blinking (2.5Hz – 200ms on and 200ms off)	The device is in the state PRE-OPERATIONAL
	Green – Single Flash (200ms flash followed by 1000ms off)	The device is in state SAFE-OPERATIONAL
	Green – Flickering (10Hz – 50ms on and 50ms off)	The device is booting and has not yet entered the INIT state or The device is in state BOOTSTRAP or Firmware download operation in progress
	Off	The device is in state INIT
ERROR	Red – On	A PDI Watchdog timeout has occurred. Example: Application controller is not responding anymore.
	Red – Blinking (2.5Hz – 200ms on and 200ms off)	General Configuration Error. Example: State change commanded by master is impossible due to register or object settings.
	Red – Flickering (10Hz – 50ms on and 50ms off)	Booting Error was detected. INIT state reached, but parameter "Change" in the AL status register is set to 0x01:change/error Example: Checksum Error in Flash Memory.
	Red – Single Flash (200ms flash followed by 1000ms off)	The slave device application has changed the EtherCAT state autonomously: Parameter "Change" in the AL status register is set to 0x01:change/error. Example: Synchronization error; device enters SAFE-OPERATIONAL automatically
	Red – Double Flash (Two 200ms flashes separated by 200ms off, followed by 1000ms off)	An application Watchdog timeout has occurred. Example: Sync Manager Watchdog timeout.

Address Selection

The drive Station Alias is set via the EtherCAT network or with the setup software. Note that drives on an EtherCAT network will be given an address automatically based on proximity to the host.

Safe Torque Off (STO) Inputs

The Safe Torque Off (STO) inputs are dedicated +5VDC sinking single-ended inputs. For applications not using STO functionality, disabling of the STO feature is required for proper drive operation. STO may be disabled by following the STO Disable wiring instructions as given in the hardware installation manual.

Mating Connector Kit

Mating connector housing and crimp contacts can be ordered as a kit using *ADVANCED* Motion Controls' part number KC-MC1XFM01. This includes mating connector housing and crimp style contacts for the Communication, I/O and Logic, and Feedback connectors. The recommended tool for crimping the contacts is Molex PN: 63819-1500 (not included with the kit).

ADVANCED Motion Controls ·3805 Calle Tecate, Camarillo, CA, 93012
ph# 805-389-1935 ·fx# 805-389-1165·www.a-m-c.com

MOUNTING DIMENSIONS

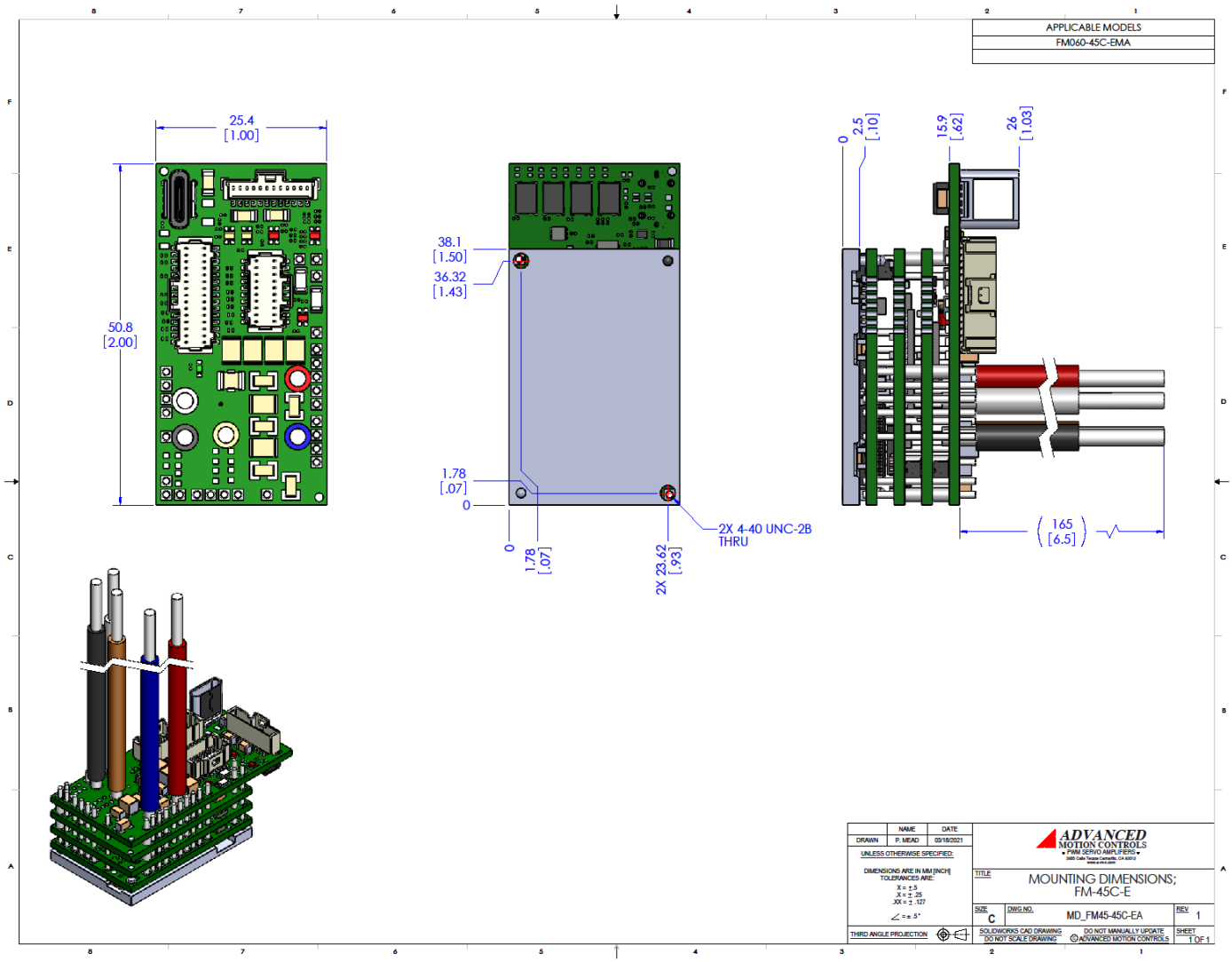

PART NUMBERING AND CUSTOMIZATION INFORMATION

F M 060 – 45C – E M

Drive Series

F	FlexPro®

Environment

X	EXtended Environment

Form Factor

E	FlexPro® Embedded
D	FlexPro® E (W/ Development board)
M	FlexPro® Machine Mount

Maximum DC Bus Voltage

060	60 VDC
100	100 VDC

Feedback

M	Multi Encoder (BiSS, 5V Incremental)

Network Communication

E	EtherCAT
C	CANopen
R	RS485/232

Continuous Current

5	5A
10	10A
25	25A
45C	45A (continuous only, no peak)
50	50A
60C	60A (continuous only, no peak)

ADVANCED Motion Controls also has the capability to promptly develop and deliver specified products for OEMs with volume requests. Our Applications and Engineering Departments will work closely with your design team through all stages of development in order to provide the best servo drive solution for your system. Equipped with on-site manufacturing for quick-turn customs capabilities, *ADVANCED* Motion Controls utilizes our years of engineering and manufacturing expertise to decrease your costs and time-to-market while increasing system quality and reliability.

Examples of Customized Products

- Optimized Footprint
- Private Label Software
- OEM Specified Connectors
- No Outer Case
- Increased Current Resolution
- Increased Temperature Range
- Custom Control Interface
- Integrated System I/O
- Tailored Project File
- Silkscreen Branding
- Optimized Base Plate
- Increased Current Limits
- Increased Voltage Range
- Conformal Coating
- Multi-Axis Configurations
- Reduced Profile Size and Weight

Feel free to contact us for further information and details!

Available Accessories

ADVANCED Motion Controls offers a variety of accessories designed to facilitate drive integration into a servo system. Visit www.a-m-c.com to see which accessories will assist with your application design and implementation.