Description

The DZSANTU-020B080 digital servo drive is designed to drive brushed and brushless servomotors, stepper motors, and AC induction motors from a compact form factor ideal for embedded applications. This fully digital drive operates in torque, velocity, or position mode and employs Space Vector Modulation (SVM), which results in higher bus voltage utilization and reduced heat dissipation compared to traditional PWM. The drive can be configured for a variety of external command signals. Commands can also be configured using the drive's built-in Motion Engine, an internal motion controller used with distributed motion applications. In addition to motor control, this drive features dedicated and programmable digital and analog inputs and outputs to enhance interfacing with external controllers and devices.

The DZSANTU-020B200 supports *ADVANCED* Motion Controls exclusive 'DxM' technology which allows connectivity of up to 3 DZSANTU-020B200 drives to a single DZEANTU-020B200 on an EtherCAT® network. DZSANTU-020B200 drives receive commands from a DZEANTU-020B200 over a high speed communication interface, allowing for up to 4 axes of servo drive control from a single EtherCAT connection. Drive commissioning and setup is accomplished through a USB interface using DriveWare® 7, available for download at www.a-m-c.com.

All drive and motor parameters are stored in non-volatile memory.

Power Range

Peak Current	20 A (14.1 A_{RMS})
Continuous Current	10 A (10 A_{RMS})
Supply Voltage	40 - 175 VDC

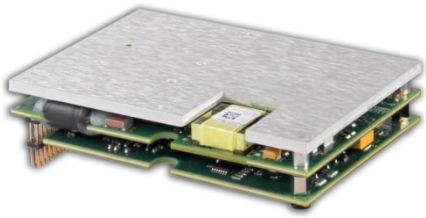

CANopen

Features

- Four Quadrant Regenerative Operation
- Space Vector Modulation (SVM) Technology
- Fully Digital State-of-the-art Design
- Programmable Gain Settings
- Fully Configurable Current, Voltage, Velocity and Position Limits
- PIDF Velocity Loop
- PID + FF Position Loop
- Compact Size, High Power Density
- 12-bit Analog to Digital Hardware
- Supports *ADVANCED* Motion Controls 'DxM' Technology
- On-the-Fly Mode Switching
- On-the-Fly Gain Set Switching
- Dedicated Safe Torque Off (STO) Inputs

MODES OF OPERATION
- Profile Current
- Profile Velocity
- Profile Position
- Cyclic Synchronous Current Mode
- Cyclic Synchronous Velocity Mode
- Cyclic Synchronous Position Mode

COMMAND SOURCE
- Over the Network

FEEDBACK SUPPORTED (FIRMWARE DEPENDENT)
- Halls
- Incremental Encoder
- Auxiliary Incremental Encoder
- 1Vp-p Sine/Cosine Encoder
- Absolute Encoder (EnDat® 2.1/2.2, Hiperface® or BiSS C-Mode)
- ±10 VDC Position
- Tachometer (±10 VDC)

INPUTS/OUTPUTS
- 1 Programmable Analog Input (12-bit Resolution)
- 5 Programmable Digital Inputs (Differential)
- 3 Programmable Digital Inputs (Single-Ended)
- 5 Programmable Digital Outputs (Single-Ended)
- 3 High Speed Captures

COMPLIANCES & AGENCY APPROVALS
- UL
- cUL
- CE Class A (LVD)
- CE Class A (EMC)
- TÜV Rheinland® (STO)
- RoHS

BLOCK DIAGRAM

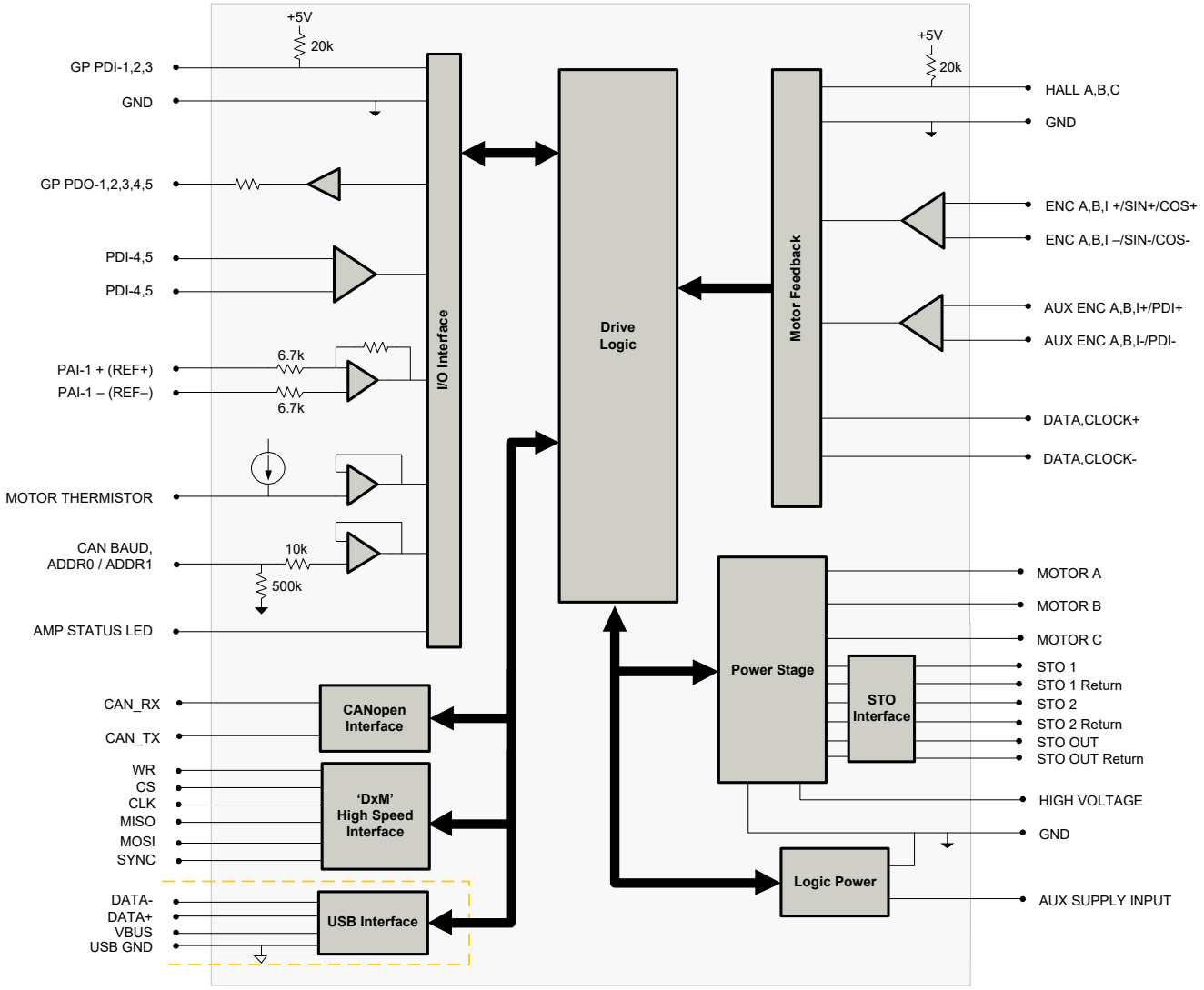

Information on Approvals and Compliances	
c UL us	US and Canadian safety compliance with UL 508c, the industrial standard for power conversion electronics. UL registered under file number E140173. Note that machine components compliant with UL are considered UL registered as opposed to UL listed as would be the case for commercial products.
CE	Compliant with European EMC Directive 2014/30/EU on Electromagnetic Compatibility (specifically EN 61000-6-4:2007/A1:2011 for Emissions, Class A and EN 61000-6-2:2005 for Immunity, Performance Criteria A). LVD requirements of Directive 2014/35/EU (specifically, EN 60204-1:2006/A1:2009, a Low Voltage Directive to protect users from electrical shock).
RoHS Compliant	The RoHS Directive restricts the use of certain substances including lead, mercury, cadmium, hexavalent chromium and halogenated flame retardants PBB and PBDE in electronic equipment.
TÜVRheinland CERTIFIED Functional Safety Type Approved www.tuv.com ID 0600000000	Functional Safety STO is TÜV Rheinland® certified and meets requirements of the following standards: • EN ISO 13849-1 Category 4 / PL e • EN IEC 61800-5-2 STO (SIL 3) • EN62061 SIL CL3 • IEC 61508 SIL 3

SPECIFICATIONS

Power Specifications		
Description	Units	Value
DC Supply Voltage Range	VDC	40 - 175
DC Bus Over Voltage Limit	VDC	190
DC Bus Under Voltage Limit	VDC	37
Logic Supply Voltage	VDC	40 - 175
Safe Torque Off Voltage (Nominal)	VDC	5 (operating active range, 2.5V to 15V)
Maximum Peak Output Current[1]	A (Arms)	20 (14.1)
Maximum Continuous Output Current[2]	A (Arms)	10 (10)
Maximum Continuous Output Power	W	1663
Maximum Power Dissipation at Continuous Current	W	88
Internal Bus Capacitance[3]	µF	7
Minimum Load Inductance (Line-To-Line)[4]	µH	500 (at 170 V supply); 225 (at 72 V supply); 150 (at 48 V supply)
Switching Frequency	kHz	20
Maximum Output PWM Duty Cycle	%	92

Control Specifications		
Description	Units	Value
Communication Interfaces	-	'DxM' High Speed Interface (USB for configuration)
Command Sources	-	Over the Network
Feedback Supported (Firmware Dependent)	-	Auxiliary Incremental Encoder, Halls, Incremental Encoder, 1Vp-p Sine/Cosine Encoder, Absolute Encoder (EnDat® 2.1/2.2, Hiperface®, or BiSS C-Mode), ±10 VDC Position, Tachometer (±10 VDC)
Commutation Methods	-	Sinusoidal, Trapezoidal
Modes of Operation	-	Profile Current, Profile Velocity, Profile Position, Cyclic Synchronous Current, Cyclic Synchronous Velocity, Cyclic Synchronous Position
Motors Supported[5]	-	Three Phase (Brushless Servo), Single Phase (Brushed Servo, Voice Coil, Inductive Load), Stepper (2- or 3-Phase Closed Loop), AC Induction (Closed Loop Vector)
Hardware Protection	-	40+ Configurable Functions, Over Current, Over Temperature (Drive & Motor), Over Voltage, Short Circuit (Phase-Phase & Phase-Ground), Under Voltage
Programmable Digital Inputs/Outputs (PDIs/PDOs)	-	8/5
Programmable Analog Inputs/Outputs (PAIs/PAOs)	-	1/0
Primary I/O Logic Level	-	5V TTL
Current Loop Sample Time	µs	50
Velocity Loop Sample Time	µs	100
Position Loop Sample Time	µs	100
Maximum Encoder Frequency	MHz	20 (5 pre-quadrature)

Mechanical Specifications		
Description	Units	Value
Agency Approvals	-	CE Class A (EMC), CE Class A (LVD), cUL, RoHS, UL, TÜV Rheinland® (STO),
Size (H x W x D)	mm (in)	88.9 x 63.5 x 20.1 (3.5 x 2.5 x 0.8)
Weight	g (oz)	125.8 (4.43)
Baseplate Operating Temperature Range[6]	°C (°F)	0 - 75 (32 - 167)
Storage Temperature Range	°C (°F)	-20 - 85 (-4 - 185)
Relative Humidity	-	0 - 90% non-condensing
Altitude	m (ft)	0 - 4000 (0 - 13123)
Cooling System	-	Natural Convection
Form Factor	-	PCB Mounted
P1 Connector	-	68-pin, 1.27 mm spaced, dual-row header
P2 Connector	-	58-pin, 2.0 mm spaced, dual-row header

Notes

1. Capable of supplying drive rated peak current for 2 seconds with 10 second foldback to continuous value. Longer times are possible with lower current limits.
2. Continuous A_{rms} value attainable when RMS Charge-Based Limiting is used.
3. Additional 100 µF / 200V external bus capacitor between High Voltage and Power Ground as close to the drive as possible required.
4. Lower inductance is acceptable for bus voltages well below maximum. Use external inductance to meet requirements.
5. Maximum motor speed for stepper motors is 600 RPM. Consult the hardware installation manual for 2-phase stepper wiring configuration.
6. Additional cooling and/or heatsink is required to achieve rated performance.

PIN FUNCTIONS

P1 - Signal Connector

Pin	Name	Description / Notes	I/O	Pin	Name	Description / Notes	I/O
1	RESERVED	Reserved. Do not connect.	-	2	CAN BAUD	CAN Bus Bit Rate Selector	I
3	PAI-1-	Differential Programmable Analog Input or Reference Signal Input (12-bit Resolution)	I	4	ADDR1	CAN Bus Address Selector	I
5	PAI-1+		I	6	ADDR0		I
7	GROUND	Ground	GND	8	GROUND	Ground	GND
9	MOT ENC B- / COS-	Primary Incremental Encoder or Cos Input from feedback device (Absolute or Sin/Cos 1Vp-p). Leave open for BiSS and EnDat 2.2.	I	10	MOT ENC A- / SIN-	Primary Incremental Encoder or Sin Input from feedback device (Absolute or Sin/Cos 1Vp-p). Leave open for BiSS and EnDat 2.2.	I
11	MOT ENC B+ / COS+		I	12	MOT ENC A+ / SIN+		I
13	GROUND	Ground	GND	14	+5V OUT	+5V User Supply (current between P1-14 and P1-29 must not exceed 250 mA)	O
15	MOTOR THERMISTOR	Motor Thermistor Input	I	16	GROUND	Ground	GND
17	MOT ENC CLK-	Serial Interface (RS485) for absolute feedback device (BiSS: MA-/+)	I/O	18	MOT ENC DATA-	Serial Interface (RS485) for absolute feedback device (BiSS: SLO-/+)	I/O
19	MOT ENC CLK+		I/O	20	MOT ENC DATA+		I/O
21	MOT ENC I-	Differential Incremental Encoder Channel I. Leave open for BiSS and EnDat 2.2.	I	22	AUX ENC B-	Auxiliary Incremental Encoder Channel B or Differential Programmable Digital Input 7	I
23	MOT ENC I+		I	24	AUX ENC B+		I
25	AUX ENC I-	Auxiliary Incremental Encoder Channel I or Differential Programmable Digital Input 8	I	26	AUX ENC A-	Auxiliary Incremental Encoder Channel A or Differential Programmable Digital Input 6	I
27	AUX ENC I+		I	28	AUX ENC A+		I
29	+5V OUT	+5V User Supply (current between P1-14 and P1-29 must not exceed 250 mA)	O	30	HALL B	Single-ended Commutation Sensor Inputs	I
31	HALL C	Single-ended Commutation Sensor Inputs	I	32	HALL A		I
33	PDI5-	Differential Programmable Digital Input (High Speed Capture)	I	34	PDI4-	Differential Programmable Digital Input (High Speed Capture)	I
35	PDI5+		I	36	PDI4+		I
37	GP PDO-5	General Purpose Programmable Digital Output	O	38	GP PDI-3	General Purpose Programmable Digital Input (High Speed Capture)	I
39	GP PDO-4	General Purpose Programmable Digital Output	O	40	GP PDI-2	General Purpose Programmable Digital Input	I
41	GP PDO-3	General Purpose Programmable Digital Output	O	42	GP PDI-1	General Purpose Programmable Digital Input	I
43	GP PDO-2	General Purpose Programmable Digital Output	O	44	AMP STATUS LED-	AMP Status LED Output for Bi-Color LED	O
45	GP PDO-1	General Purpose Programmable Digital Output	O	46	AMP STATUS LED+		O
47	RESERVED	Reserved. Do not connect.	-	48	RESERVED	Reserved. Do not connect.	-
49	+5V USB	USB Supply	I	50	DATA- USB	USB Data Channel	I/O
51	GND USB	USB Ground	UGND	52	DATA+ USB		I/O
53	GROUND	Ground	GND	54	GROUND	Ground	GND
55	RESERVED	Reserved. Do not connect.	-	56	CAN_LOW	CAN_L bus line (dominant low)	I/O
57	RESERVED		-	58	CAN_HIGH	CAN_H bus line (dominant high)	I/O
59	GROUND	Ground	GND	60	WR	'DxM' Sub-Node High Speed Comm Channel	I/O
61	RESERVED	Reserved. Do not connect.	-	62	CS		I/O
63	SYNC	'DxM' Sub-Node High Speed Comm Channel	I/O	64	CLK		I/O
65	MOSI		I/O	66	MISO		I/O
67	GROUND	Ground	GND	68	GROUND	Ground	GND

P2 - Power Connector

Pin	Name	Description / Notes	I/O
SAFE1	STO OUT RETURN	Safe Torque Off Output Return	STORETO
SAFE2	STO OUTPUT	Safe Torque Off Output	O
SAFE3	STO-2 RETURN	Safe Torque Off 2 Return	STORET2
SAFE4	STO-2	Safe Torque Off – Input 2	I
SAFE5	STO-1 RETURN	Safe Torque Off 1 Return	STORET1
SAFE6	STO-1	Safe Torque Off – Input 1	I
SAFE7	NC	Not Connected	-
SAFE8	NC		-
1	AUX SUPPLY INPUT	Auxiliary Supply Input for Logic backup (Optional)	I
2	AUX SUPPLY INPUT		I
3-10	HIGH VOLTAGE	DC Power Input. Additional 100µF / 200V external bus capacitor required between HV and Ground.	I
11	NC	Not Connected	-
12	NC		-
13-20	GROUND	Ground connection for input power	GND
21	NC	Not Connected	-
22	NC		-
23-30	MOTOR A	Motor Phase A. Current output distributed equally across 8 pins per motor phase, 3A Continuous Current Rating Per Pin.	O
31	NC	Not Connected	-
32	NC		-
33-40	MOTOR B	Motor Phase B. Current output distributed equally across 8 pins per motor phase, 3A Continuous Current Rating Per Pin.	O
41	NC	Not Connected	-
42	NC		-
43-50	MOTOR C	Motor Phase C. Current output distributed equally across 8 pins per motor phase, 3A Continuous Current Rating Per Pin.	O

Pin Details

ADDR0 (P1-6); ADDR1 (P1-4)

ADDR0, as well as *ADDR1*, are used to set the DZSANTU drive address on the EtherCAT network.

DZSANTU drives are designed to support 'DxM' technology where up to three DZSANTU drives connect to a single DZEANTU drive over high speed communication channels (A, B, and C). For proper operation in this configuration, the correct voltages need to be applied to *ADDR0* and *ADDR1*, depending on which channel the DZSANTU is connected to. The values are given in the table below.

DZEANTU Connection	ADDR1 Voltage (Volts)	ADDR1 Value (Hex)	ADDR0 Voltage (Volts)	ADDR0 Value (Hex)	Node ID (Decimal)
Channel A	0	0	0.2	1	**001**
Channel B	0	0	0.4	2	**002**
Channel C	0	0	0.6	3	**003**

CAN BAUD (P1-2)

DZSANTU drives are required to use the bitrate stored in non-volatile memory (set to 1 Mbit/s). Short the *CAN BAUD* pin to ground to use this setting.

Note that DZSANTU drives used with the MC4XDZP01 mounting card in a 'DxM' technology configuration will automatically be assigned addresses of 1, 2, and 3, and a bitrate of 1 Mbit/s. No action is required in this configuration to set the addresses and bitrate for the DZSANTU drive(s).

Safe Torque Off (STO) Inputs (P2-SAFE1 to P2-SAFE8)

The Safe Torque Off (STO) Inputs are dedicated +5VDC sinking single-ended inputs.

MECHANICAL INFORMATION

P1 - Signal Connector		
Connector Information		68-pin, 1.27mm spaced, dual-row header
Mating Connector	Details	Samtec: CLP-134-02-F-D-BE-A-K (bottom entry); FLE-134-01-G-DV-A-K (top entry)
	Included with Drive	No

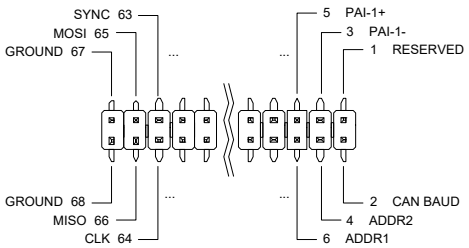

P2 - Power Connector		
Connector Information		58-pin, 2.0mm spaced, dual-row header
Mating Connector	Details	Samtec: CLT-129-02-F-D-BE-A-K (bottom entry); TLE-129-01-G-DV-A-K (top entry)
	Included with Drive	No

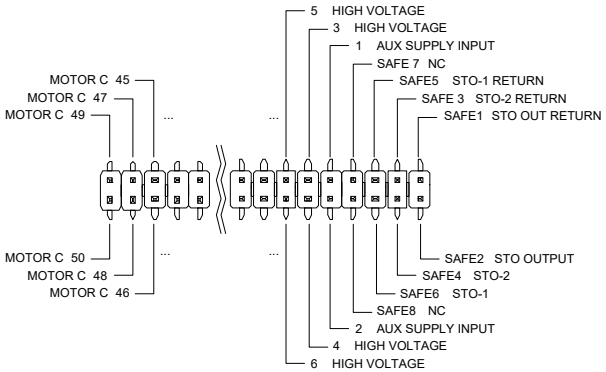

MOUNTING DIMENSIONS

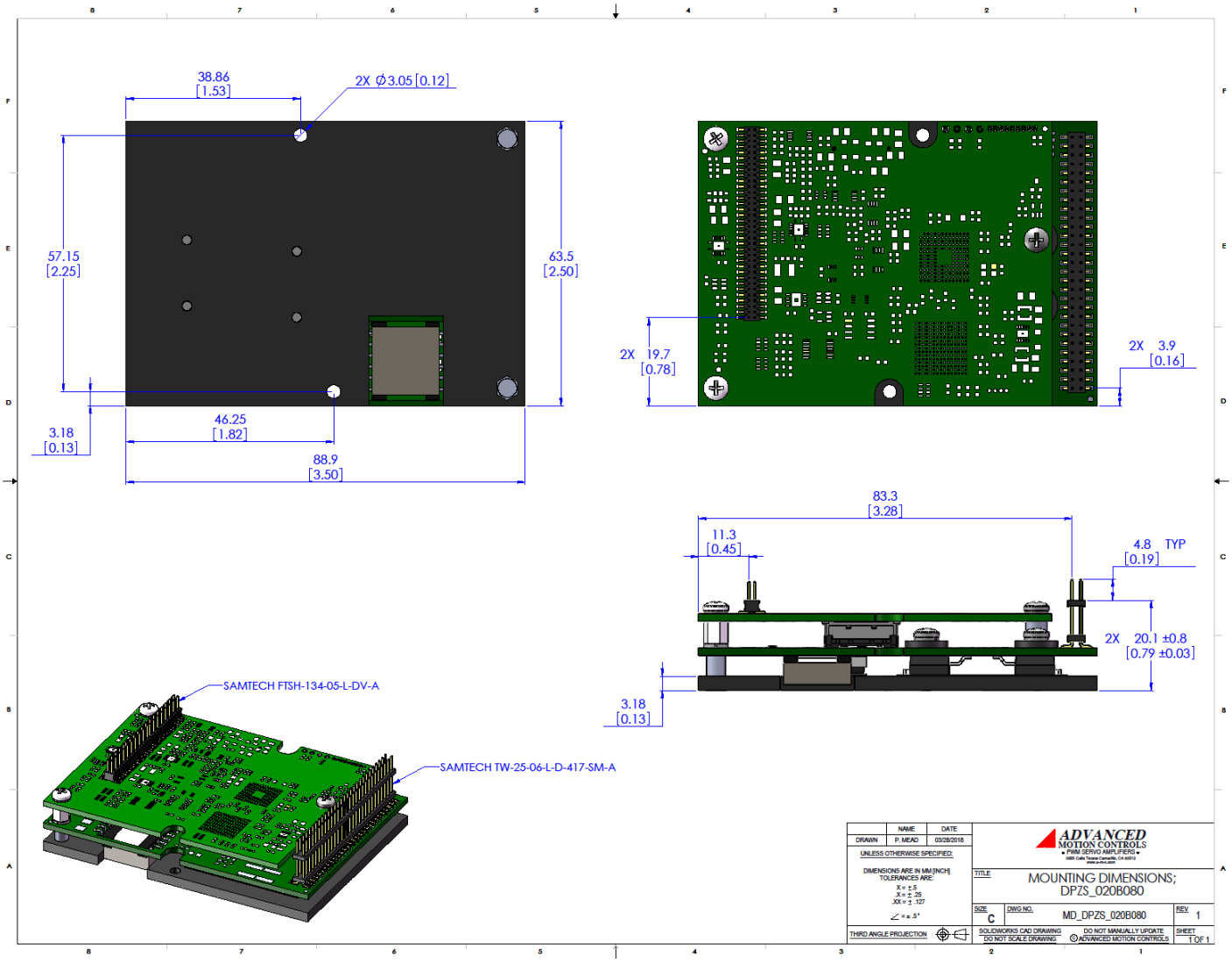

PART NUMBERING INFORMATION

Example: **D Z S A N T U - 0 2 0 B 2 0 0**

Drive Series	
DZ	DigiFlex Z (PCB Mount)

Communication	
C	CANopen
E	EtherCAT
S	EtherCAT Sub-node
P	POWERLINK / Modbus TCP / Ethernet
R	RS485 / Modbus RTU

Command Inputs	
AN	Analog (±10V) No Step & Direction
AL	Analog (±10V) Low Voltage Step & Direction (5V)

Digital I/O	
T	TTL (5V) Non-Isolated

Motor Feedback	
E	Incremental Encoder and/or Halls
U	Universal (Halls, Inc. Enc., Abs. Enc, 1Vp-p Sin/Cos Enc.)

Max DC Bus Voltage (V_{DC})	
080	80
200	175

Power and Logic Supply	
B	DC Input Both Logic Supply Options (Internal or User)
L	DC Input Logic Supply Required

Peak Current ($A_{0\ to\ Peak}$)		
012	12 A	80V Drives
020	20 A	
040	40 A	
060	60 A	
010	10 A	175V Drives
020	20 A	
025	25 A	

DigiFlex® Performance™ series of products are available in many configurations. Note that not all possible part number combinations are offered as standard drives. All models listed in the selection tables of the website are readily available, standard product offerings.

ADVANCED Motion Controls also has the capability to promptly develop and deliver specified products for OEMs with volume requests. Our Applications and Engineering Departments will work closely with your design team through all stages of development in order to provide the best servo drive solution for your system. Equipped with on-site manufacturing for quick-turn customs capabilities, *ADVANCED* Motion Controls utilizes our years of engineering and manufacturing expertise to decrease your costs and time-to-market while increasing system quality and reliability.

Examples of Customized Products

- Optimized Footprint
- Private Label Software
- OEM Specified Connectors
- No Outer Case
- Increased Current Resolution
- Increased Temperature Range
- Custom Control Interface
- Integrated System I/O
- Tailored Project File
- Silkscreen Branding
- Optimized Base Plate
- Increased Current Limits
- Increased Voltage Range
- Conformal Coating
- Multi-Axis Configurations
- Reduced Profile Size and Weight

Feel free to contact Applications Engineering for further information and details.

Available Accessories

ADVANCED Motion Controls offers a variety of accessories designed to facilitate drive integration into a servo system. Visit www.a-m-c.com to see which accessories will assist with your application design and implementation.

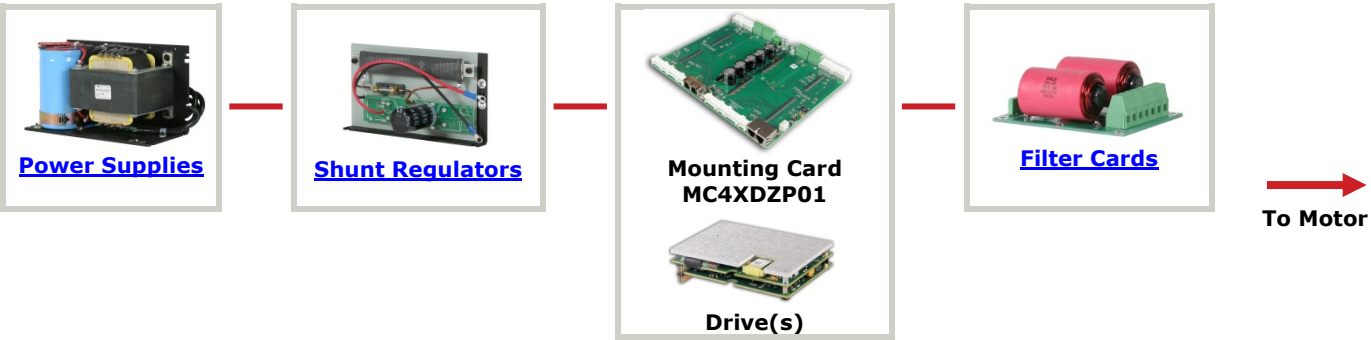

All specifications in this document are subject to change without written notice. Actual product may differ from pictures provided in this document.